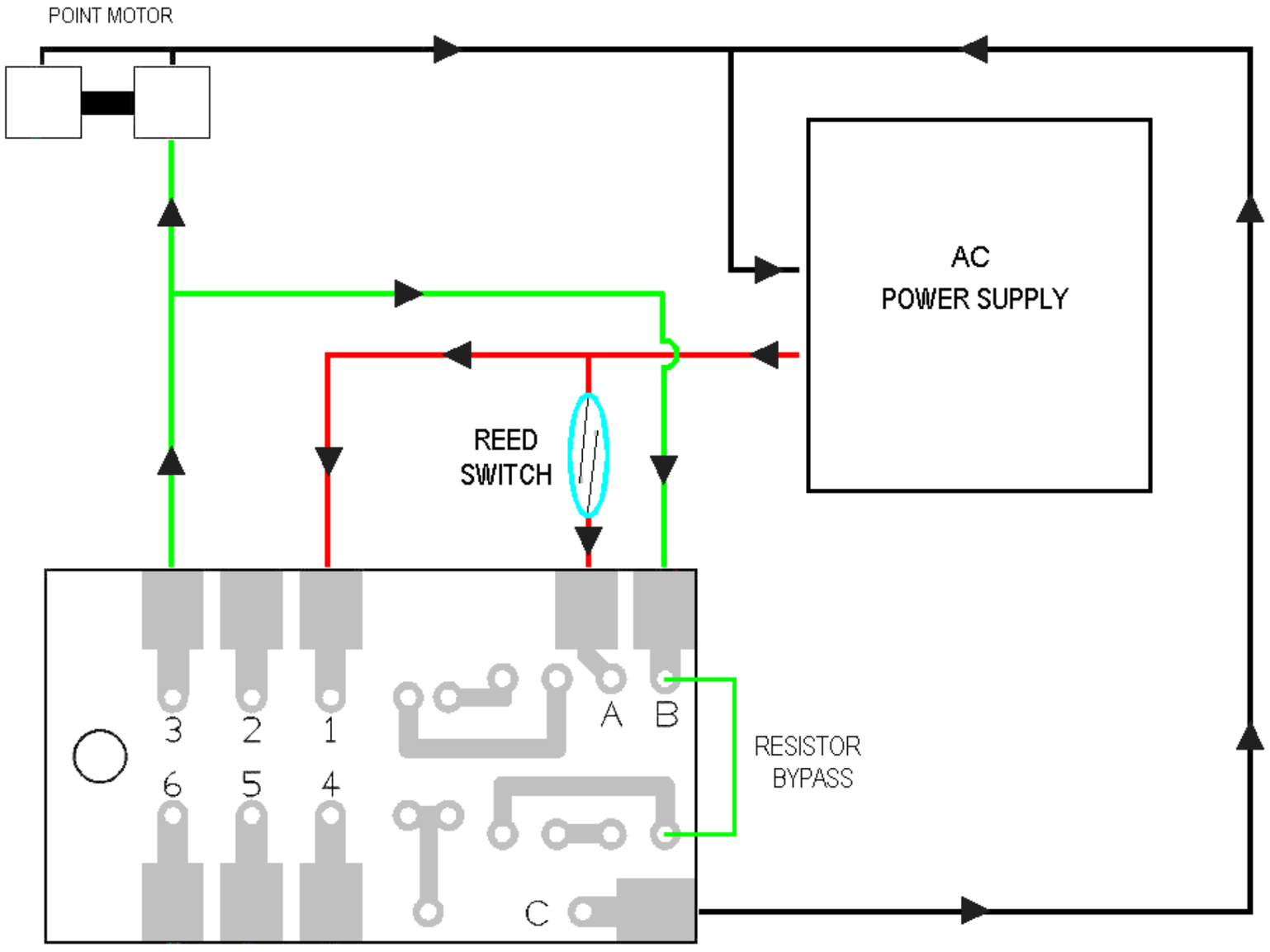

GM500 SINGLE PULSE